REV.	DESCRIPTION	DATE
B/0	升B版	2017.05.04

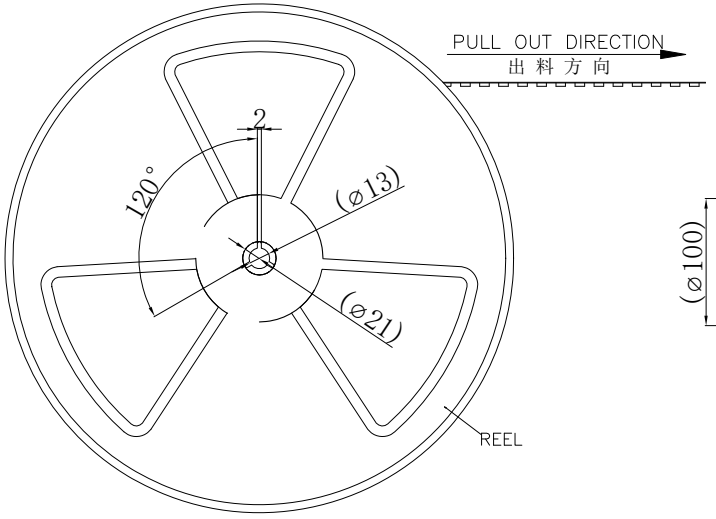

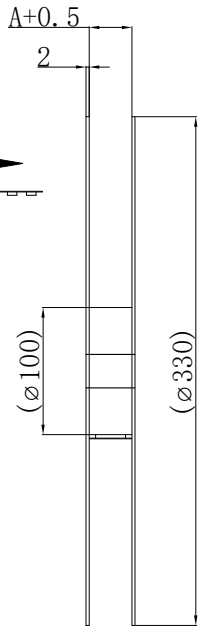

Note:
1. Sprocket holes pitch cumulative tolerance ±0.1.(Accumulative Pitch ±0.2)
2. Carrier camber is within 1mm in 100mm.
3. Number of connectors: 1000Pcs/REEL
4. All dimensions meet EIA-481-D requirements.
5. Thick ness:0.4±0.1mm.
6. Material of top fape:PET,PE.PEF
7. Material of carrier fape:Poystyrene
8. For tape width (dimension A) 16mm and 24mm a pilot hole is provided on one side. For tape width (dimension A)32mm and 44mm pilot holes are provided on both sides.

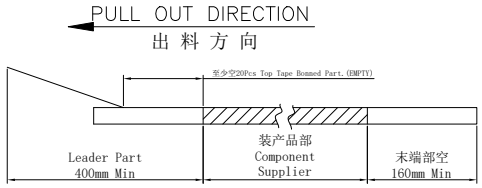

载带带头及带尾尺寸
Lead tape length

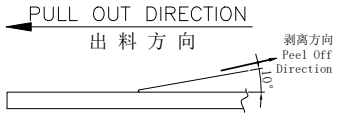

载带上下带剥离强度：0.1N--1.3N(10g-130g)
Peeling off force of top tape:
0.1N--1.3N(10g-130g)

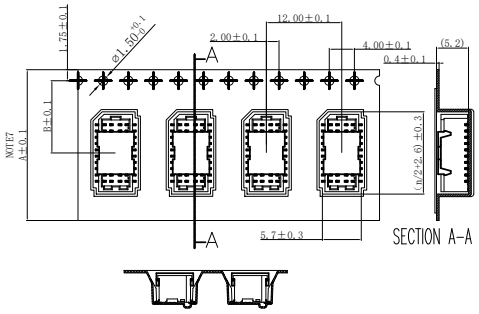

PULL OUT DIRECTION
出 料 方 向
宽度:16mm/24mm 载带

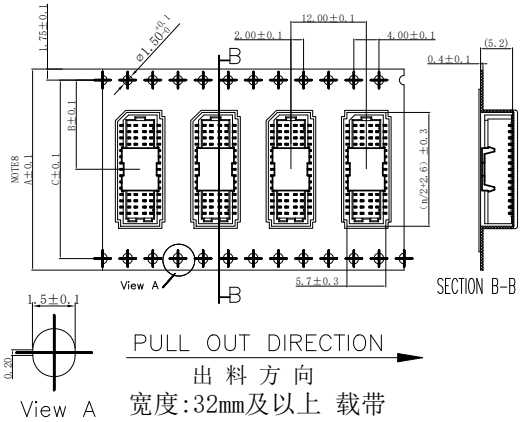

PULL OUT DIRECTION
出 料 方 向
宽度:32mm及以上 载带

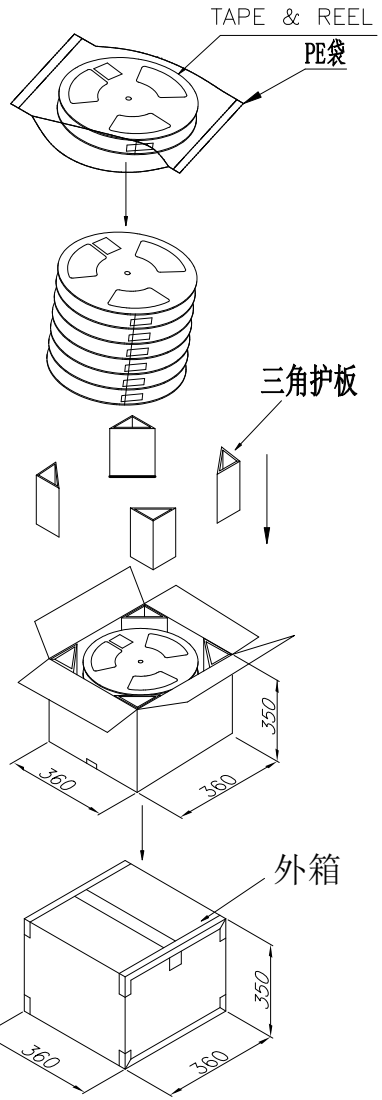

ROHS管理规定:
1、禁止使用含有ROHS指令所限制的物质。
2、对应的SGS或ITS出具的ICP-AES数据、不可测定物质的成分表，有效期一年。

芯数 Pin (n)	PART NO.	尺寸 Size A	B	C
12-22	61015-120*-****----61015-220*-****	24.0	11.5	---
30	61015-300*-****	32.0	14.2	28.4
40-50	61015-400*-****----61015-500*-****	44.0	20.2	40.4

PART No.	61015-**0*-****				
REEL WIDTH	24	32	44		
PCS/REEL	1000				
REEL/BOX	12	9	7		
BOX/PCS	12K	9K	7K		
CTN. SIZE	360*360*350				

GENERAL TOLERANCES
0.X ±0.25 X.° ±3°
0.XX ±0.12
0.XXX ±0.05 X.X° ±0.5°

UNIT	SIZE	SCALE
MM	A4	1:1

DRAWN BY	赵婷婷/2017.05.04	
CHK. BY	崔华文/2017.05.04	
APRV. BY	洪新江/2017.05.04	

DRAWING NO. 004-1015-001

新富尔电子有限公司
XINFUER ELECTORN CO.,LTD

SHEET	PROD. NAME	SHD-nAB/SHD-nABS
1 OF 1	PART NO.	61015-**0*-****

TITLE 1.0 WTB CONN.SMT DUAL ROW VERTICAL

借用登记
旧底图总号
底图总号
签 字
日 期