REV.	DESCRIPTION	DATE
B/0	升 B 版	2016.12.10
B/2	增加34PIN	2021.09.04

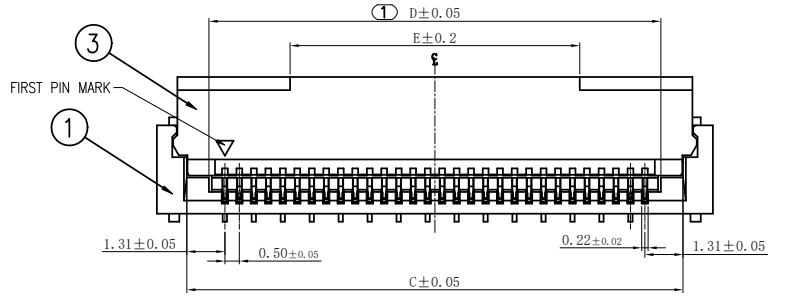

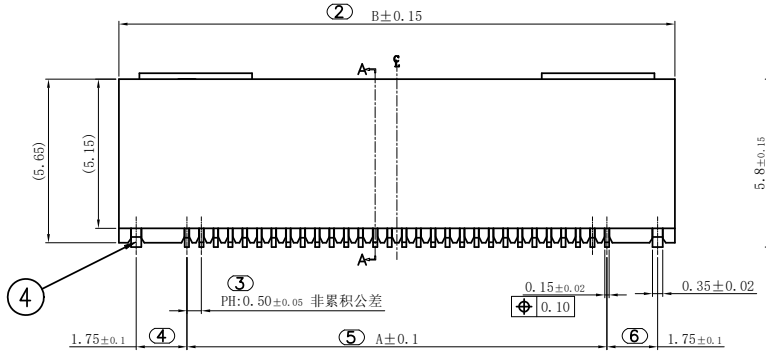

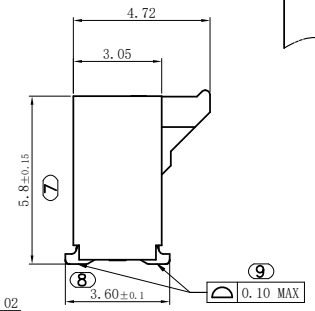

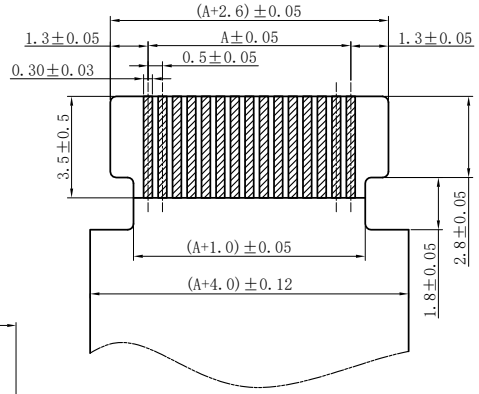

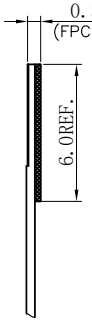

适用FPC寸法

APPLICABLE FPC

NOTES:
1. MATERIAL SEE TABLE;
2. PLATING SEE TABLE;
3. RATING
3-1. OPERATING TENPERATURE:-40~105°C
3-2. OPERATING VOLTAGE: 50V AC/DC
3-3. CURRENT RATING: 0.5 AMPS
3-4. DIELECTRIC WITHSTANGING VILTAGE: 500V AC/Minute;
3-5. INSULATION RESISTANCE:500MΩ Min;
3-6. CONTACT RESISTANCE:0.03Ω Max;
4. PART NO.

60095-**07-5001

- SERIES
- CIRCUIT NO.
- Packing Option: 0=Reel Packing
- Plating: 7=Contact area and Solder tails area Gold Plating 1μ″ Min. Over Ni 30μ″ Min.
- Lead Free & HF: 5=Halogen-Free

CKT	Dim A	Dim B	Dim C	Dim D	Dim E
10	4.50	9.20	7.12	5.60	5.2
12	5.50	10.20	8.12	6.60	5.2
14	6.50	11.20	9.12	7.60	5.2
16	7.50	12.20	10.12	8.60	8.0
20	9.50	14.20	12.12	10.60	8.0
21	10.00	14.70	12.62	11.10	10.0
24	11.50	16.20	14.12	12.60	10.0
30	14.50	19.20	17.12	15.60	10.0
34	16.50	21.20	19.12	17.60	10.0
36	17.50	22.20	20.12	18.60	10.0
40	19.50	24.20	22.12	20.60	10.0
45	22.00	26.70	24.62	23.10	10.0
50	24.50	29.20	27.12	25.60	10.0
60	29.50	34.20	32.12	30.60	10.0
70	34.50	39.20	37.12	35.60	10.0

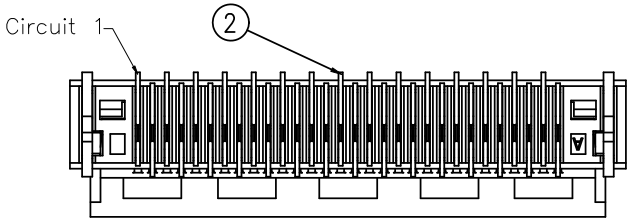

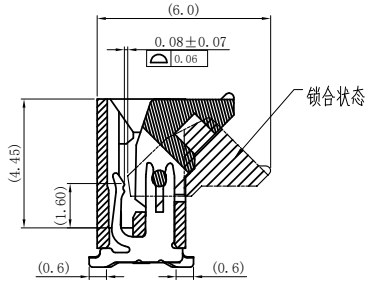

SECTION A-A

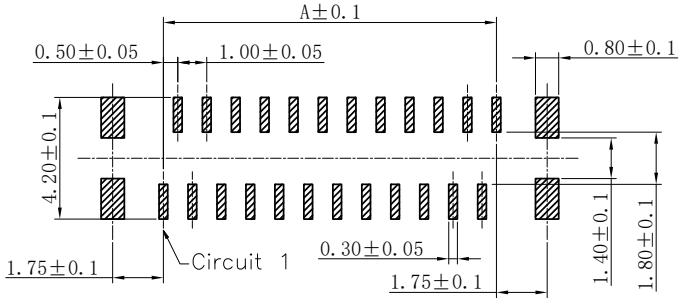

适用线路板

RECOMMENDED PCB LAYOUT

序号	图号	名称	材料	数量	附注
4	122-0095-001	铆钉 Fitting Nail	磷铜 Phosphor Bronze	2	电镀(铜): 整个表面镀底镍30u"MIN,耳朵镀铜80u"MIN..
3	142-0095-001	锁扣 Actuator	LCP(UL94V-0)	1	黑色
2	112-0095-001	端子 Contact	磷铜 Phosphor Bronze	N	电镀: 整个表面镀底镍30u"MIN,耳朵镀区点镀金1u"MIN..
1	132-0095-001	主体 Housing	LCP(UL94V-0)	1	本色

GENERAL TOLERANCES

0.X ±0.25 X.° ±3°
0.XX ±0.12
0.XXX ±0.05 X.X° ±0.5°

DRAWN BY	赵婷婷/2016.12.10	
CHK. BY	崔华文/2016.12.10	
APRV. BY	洪新江/2016.12.10	

新富尔电子有限公司
XINFUER ELECTORN CO.,LTD

UNIT	SIZE	SCALE	DRAWING NO.	SHEET	PROD. NAME
MM	A4	1:1	006-0095-001	1 OF 1	0.5-25-nPLB
				PART NO.	60095-**07-5001

TITLE: 0.5 FPC CONN. ZIF SMT FRONTFLIP H=5.8 VERTICAL CONTACT

借用登记
旧底图总号
底图总号
签 字
日 期