REV.	DESCRIPTION	DATE
B/0	升B版	2016.12.28

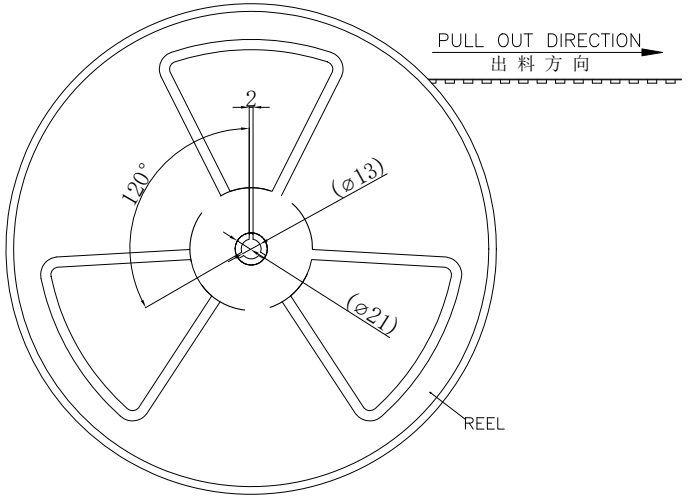

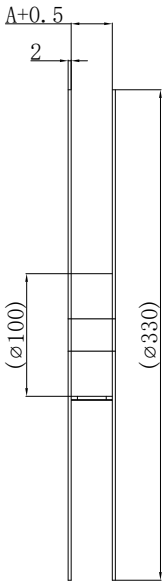

Note:

1. Sprocket holes pitch cumulative tolerance ±0.1.(Accumulative Pitch ±0.2)
2. Carrier camber is within 1mm in 100mm.
3. All dimensions meet EIA-481-D requirements.
4. Thick ness:0.4±0.1mm.
5. Material of top fape:PET,PE.PEF
6. Material of carrier fape:Poystyrene
7. For tape width (dimension A) 16mm and 24mm a pilot hole is provided on one side. For tape width (dimension A)32mm and 44mm pilot holes are provided on both sides.

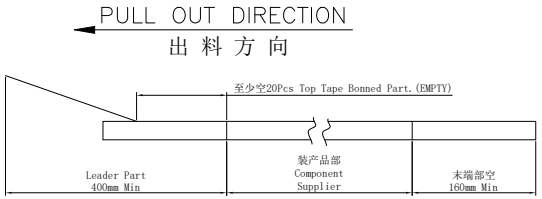

载带带头及带尾尺寸
Lead tape length

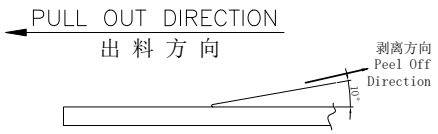

载带上下带剥离强度：0.1N--1.3N(10g-130g)
Peeling off force of top tape:
0.1N--1.3N(10g-130g)

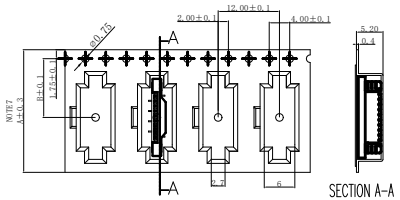

宽度:16mm/24mm 载带

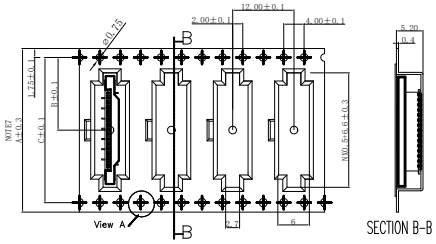

宽度:32mm及以上 载带

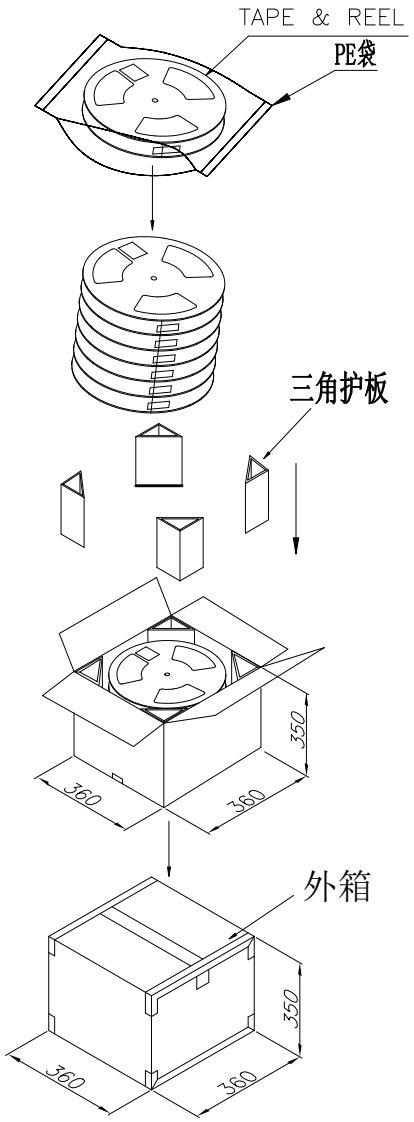

芯数 Pin (n)		尺寸 Size A	B	C
2	60066/60067-020*-50**	16.0	7.5	----
3-9	60066/60067-030*-50**----60066/60067-090*-50**	24.0	11.5	----
10-15	60066/60067-100*-50**----60066/60067-150*-50**	32.0	14.2	28.4
16-27	60066/60067-160*-50**----60066/60067-270*-50**	44.0	20.2	40.4
28-29	60066/60067-280*-50**----60066/60067-290*-50**	56.0	26.2	52.4

PART No.	60068/60069-**0*-****				
REEL WIDTH	16	24	32	44	56
PCS/REEL	1000				
REEL/BOX	16	12	9	7	5
BOX/PCS	16K	12K	9K	7K	5K
CTN. SIZE	360*360*350				

GENERAL TOLERANCES
0.X ±0.25 X.° ±3°
0.XX ±0.12
0.XXX ±0.05 X.X° ±0.5°

UNIT	SIZE	SCALE
MM	A4	1:1

DRAWN BY	赵婷婷/2016.12.28	
CHK. BY	崔华文/2016.12.28	
APRV. BY	洪新江/2016.12.28	

DRAWING NO. 004-0068-001

新富尔电子有限公司
XINFUER ELECTORN CO.,LTD

SHEET 1 OF 1
PROD. NAME 1.0-08-nPLB/nPLBF
PART NO. 60068/60069-**0*-****
TITLE 1.0 FPC CONN. ZIF SMT DRAWER H=2.65 VERTICAL CONTACT

借用登记
旧底图总号
底图总号
签 字
日 期